COEN 6521, Winter 2005 **Assignment 1**

1. (Boolean function representation- 30 points) Consider a Boolean threshold function f_T that is equal to one if at least 3 out of its 4 input bits are one. Construct:
   a) Truth table
   b) Sum of products expression that is irredundant and prime
   c) Binary Decision Tree
   d) Binary Decision Diagram derived from c) representing the function f_T.

   In deriving the above circuit representations, please refer to the steps taken, including the use of appropriate expansions (e.g, Shannon, Davio), as detailed out in the textbook.

2. (Pseudo-Boolean, or word-level representation – 20 points) Consider a word-level function over three words

$$f = a*b+c,$$

   where a, b and c are n-bit unsigned integers.
   a) Construct its representation by a word-level polynomial, i.e. its Arithmetic Transform. Explain steps used in obtaining the polynomial from this description.
   b) Show the polynomial describing multiplication in both expanded and unexpanded forms.

3. (Bus Errors – 30 points). Consider an adder and a multiplier connected to the common buses:

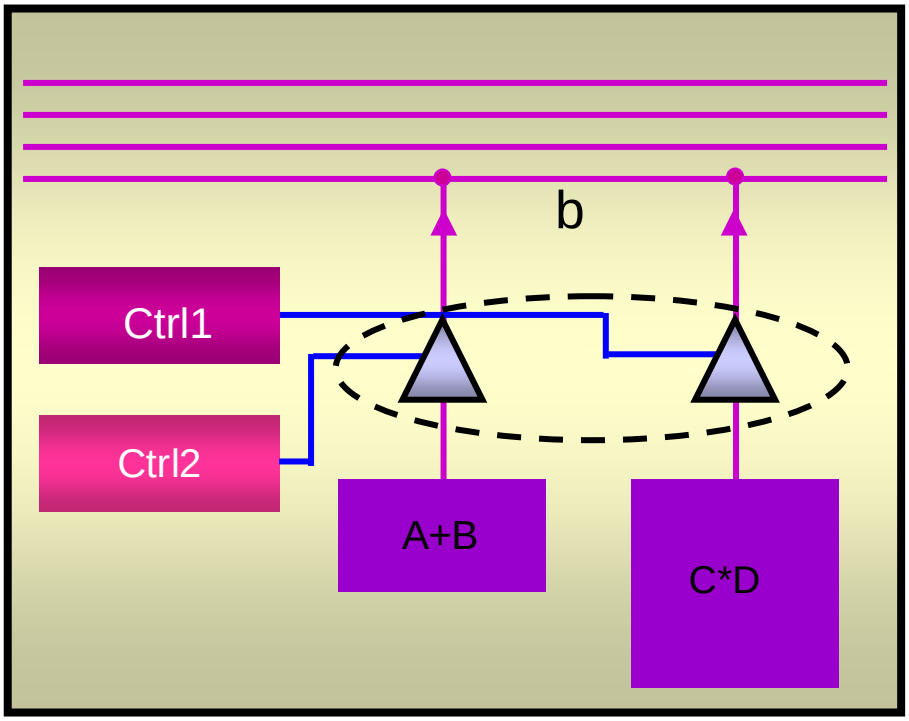

Assume that A and B are 4-bit unsigned integers, while C and D are 3-bit unsigned integers.

a) Denote the width of the common (shared) bus *b*

b) Describe error type 8 from Figure 47 in the textbook for the case of control signal Ctrl1 being active by its error polynomial. Assume that the bus lines are completely reversed, i.e., b_{n-1} becomes b_0 etc. The error polynomial should be expressed in terms of input values to the block driving the bus.

c) Describe error type 10 by the error polynomial. Assume that when the both drivers are active the signals arithmetically add up (word-level quantities add up).

4. (Event-driven simulation – 20 points). Consider the circuit from Example 25. Replace AND gate with OR and vice-versa and show the following:
    a) Circuit diagram and timing diagram for the same input sequence as in Fig 25.a
    b) Table with scheduled events and activity list for event-driven simulator

*All references are to the textbook by Radecka and Zilic. Other textbooks are not required for the completion of this assignment and in some instances have no equivalent description.